MARK	REV	DESCRIPTION	SIGN	DATE

NOTES: 1.MATERIAL: ENGINEERING PLASTIC, LCP WTH 30% G.F.,UL94V-0 RATED, COLOR BLACK.
2.FINISH:
-UNDERPLATING: 1.27um (50u") NICKEL UNDERPLATNIG
-CONTACT AREA:
0.25um(10u")AU IN CONTACT AREA OVER NICKEL UNDERPLATING.
-SOLDERING ZONE: 3.0um(120u")MIN. 100%TIN PLATING OVER NICKEL UNDERDLATING.
3.USING ALL MATERIAL TO ACCORD WITH RoSH CODE.

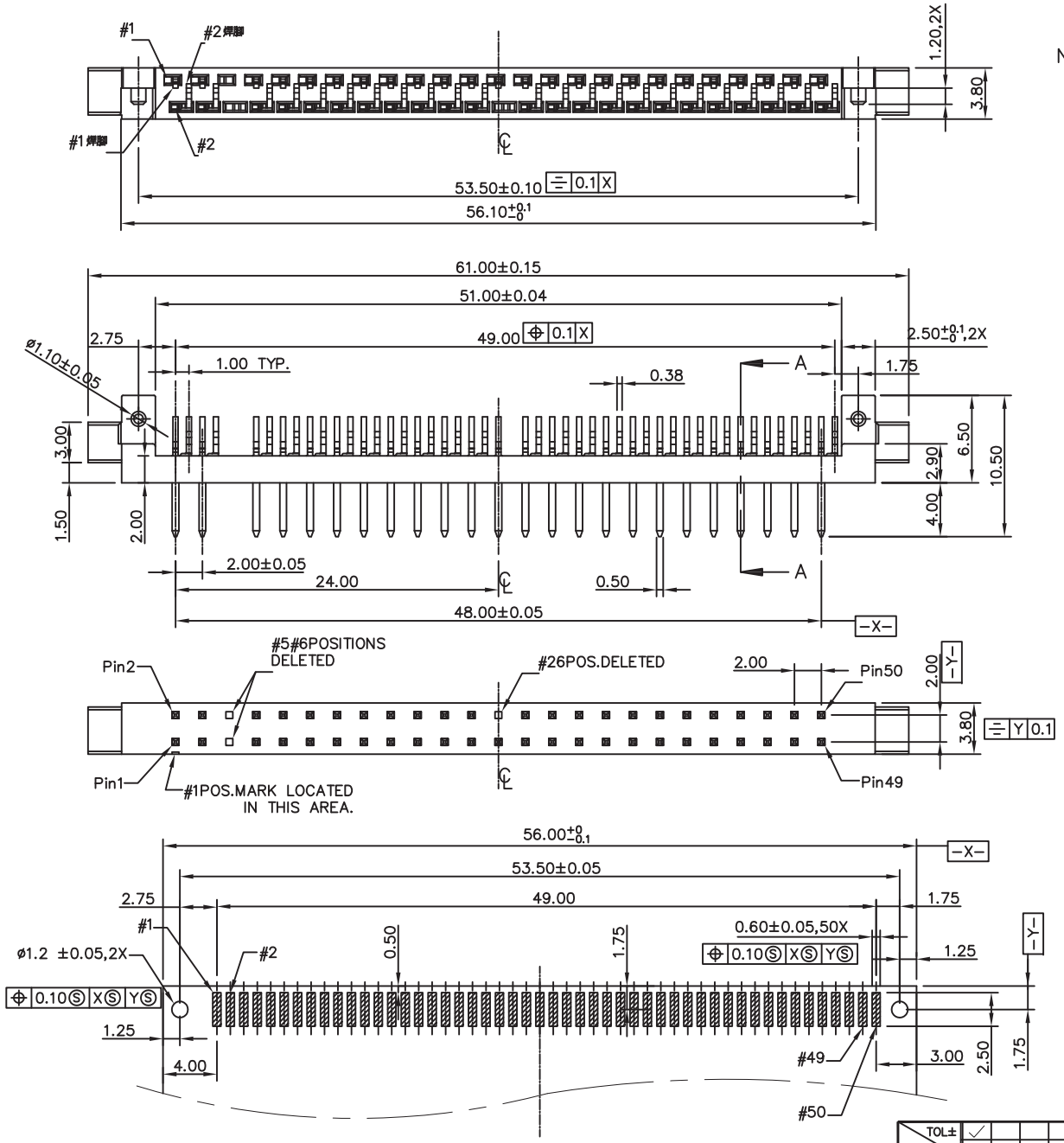

PCB LAYOUT

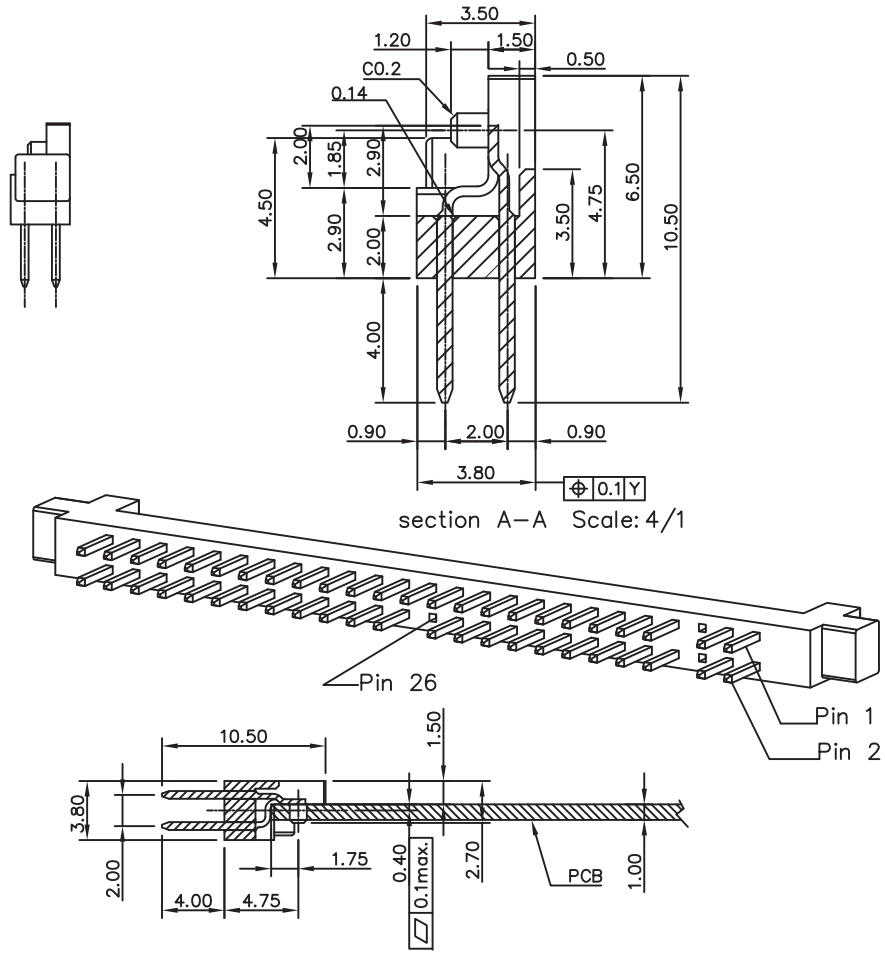

section A-A Scale: 4/1

TOL± / RANGE	M1	M2	S1	S2	P1	P2	C	USR
0~6	.05	0.1	0.15	0.2	.05	0.1	0.5	
6~30	0.1	0.2	0.15	0.25	0.1	0.15	1	
30~80	.15	0.25	0.2	0.3	0.2	0.4	2	
80~180	.15	0.3	0.25	0.45	0.4	0.8	3	
180~315	0.2	0.5	0.4	0.6	0.6	1.2	3	
315~800	0.3	0.8	0.7	1.1	0.8	1.5	4	
ANG. TOL±	0°~30°	0.2°	30°~60°	0.5°	60°~90°	1°		

MODEL	ET1-01-01	DESCRIPTION	IDE 50pin connector		
DATE	07/11/2007	DWG NO.	ET101-013010	REV	1.0
DRN	ying	P/N NO.	ET101-1013010	SCALE	2/1
CKD		EVERTRON		DIM	MM
APPD	VJC			SIZE	A4